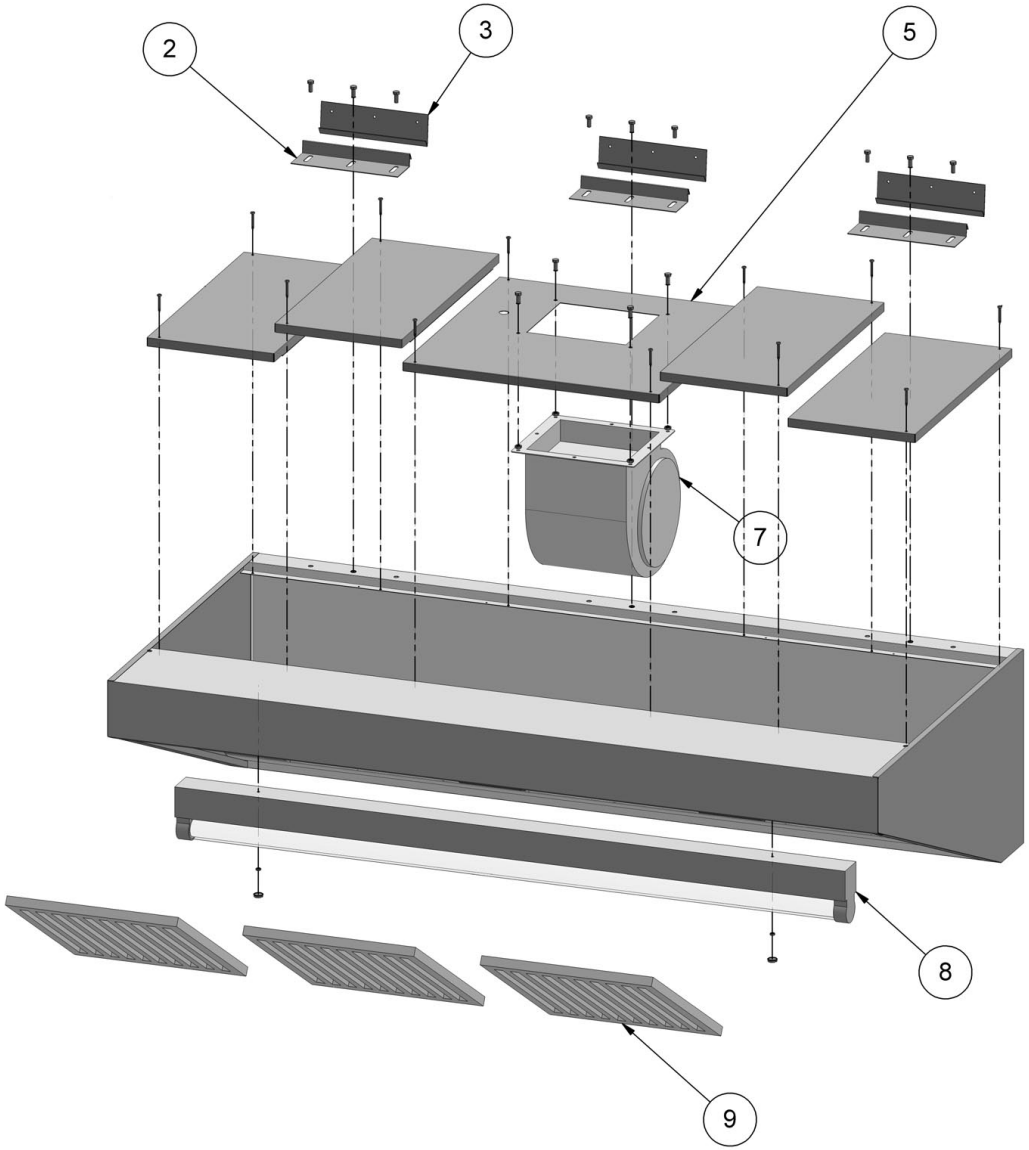

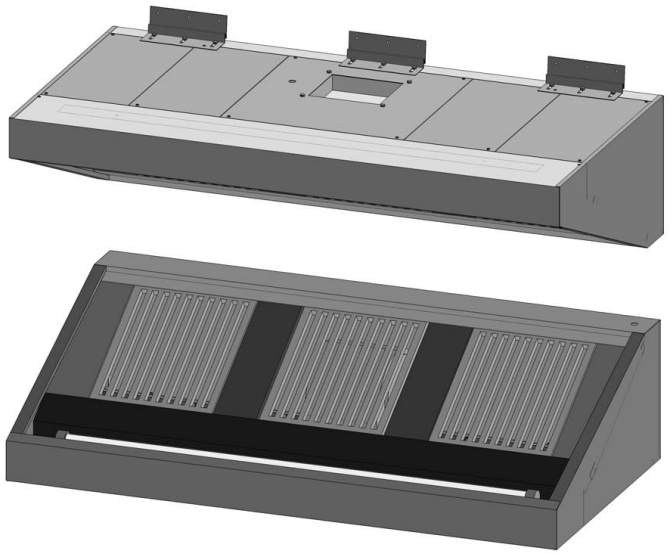

Bartscher

Wandhaube 700
Artikel-Nr.: 257130 - 257300,
258100 - 258280

Explosionszeichnung
31.03.2014

Pos.	Gerätenr.	Artikelbeschreibung	Description of item	Artikel Nr./Item No.
2		Halterung z. Haube	Bracket f. hood	010100
3		Wandhaltung	Wall bracket	020100
5		Halterung z. Motor (Haube mit Motor)	Bracket f. motor (Hood with Motor)	E0010060
		Halterung (Haube ohne Motor)	Bracket (Hood without motor)	E0130060
7		Motor 200 W	Motor 200 W	020177
		Motor 420 W	Motor 420 W	E020199
8	257130	Lampe 600mm, 18Watt	Lamp 600mm, 18Watt	E0KLV18H50
	257140	Lampe 600mm, 18Watt	Lamp 600mm, 18Watt	E0KLV18H50
	257150	Lampe 600mm, 18Watt	Lamp 600mm, 18Watt	E0KLV18H50
	257160	Lampe 1200mm, 25 Watt	Lamp 1200mm, 25 Watt	E0KLV36H50
	257170	Lampe 1200mm, 25 Watt	Lamp 1200mm, 25 Watt	E0KLV36H50
	257180	Lampe 1200mm, 25 Watt	Lamp 1200mm, 25 Watt	E0KLV36H50
	257200	Lampe 1200mm, 25 Watt	Lamp 1200mm, 25 Watt	E0KLV36H50
	258100	Lampe 600mm, 18Watt	Lamp 600mm, 18Watt	E0KLV18H50
	258120	Lampe 600mm, 18Watt	Lamp 600mm, 18Watt	E0KLV18H50
	258140	Lampe 600mm, 18Watt	Lamp 600mm, 18Watt	E0KLV18H50
	258160	Lampe 1200mm, 25 Watt	Lamp 1200mm, 25 Watt	E0KLV36H50
	258180	Lampe 1200mm, 25 Watt	Lamp 1200mm, 25 Watt	E0KLV36H50
	258200	Lampe 1200mm, 25 Watt	Lamp 1200mm, 25 Watt	E0KLV36H50
9		Filter	Filter	020405
o.Abb./n.pic		Fettablasshahn	Grease drain cock	030100